LWB SURFLINE

VW- T6 & T5
Unit Assembly Diagrams

Kitline Design

Flatpack Campervan Units

Kitline Design
Flatpack Campervan Units

Assembling The Laminate Components

The flat packed panels use cam locks that fit into the 20mm holes which then insert into the 8.5mm holes.

When tightening the cam locks be sure not to over tighten. The locks will only turn a maximum of 180 degrees.

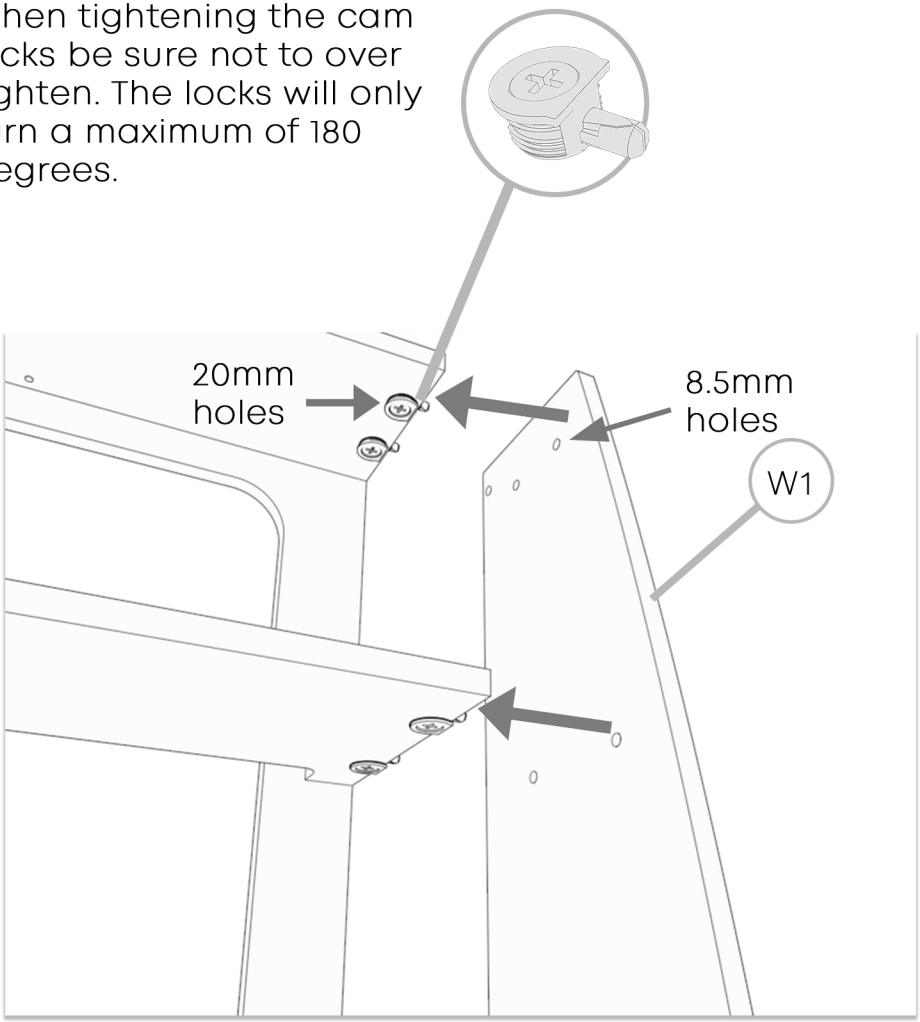

Draws and Doors

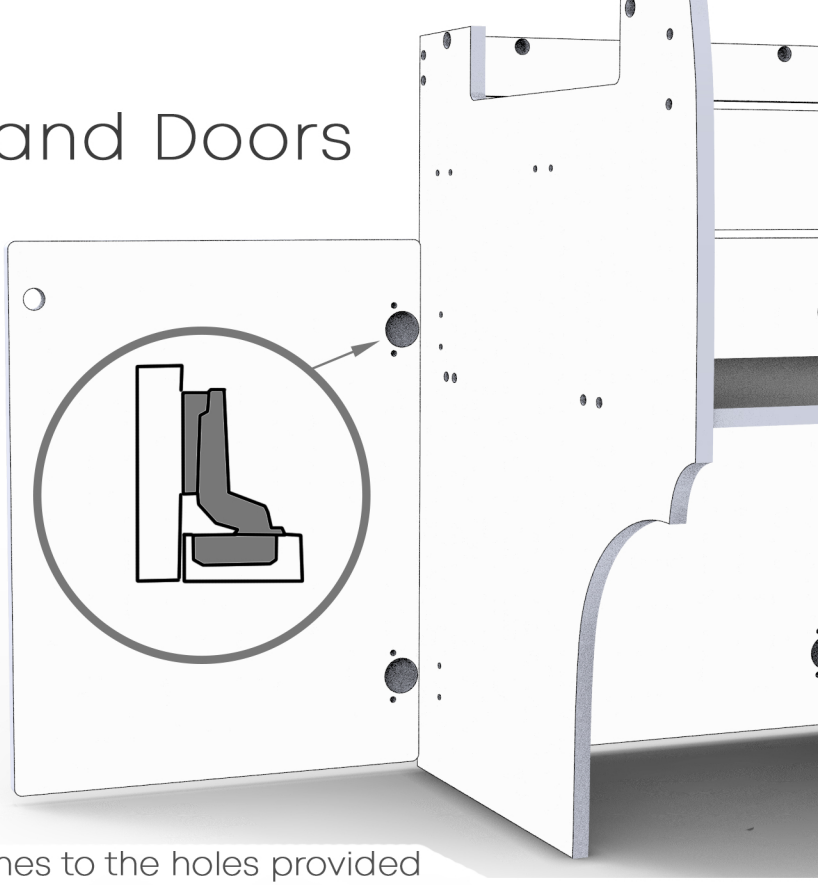

The doors use the cranked hinges provided which then mount to the side of the unit.

This can be the adjusted to achieve the desired fit.

Fix the Rev Latches to the holes provided (opposite side to the hinges on the doors). Once these are in place, fix the latch plates to stop the door from over-extending.

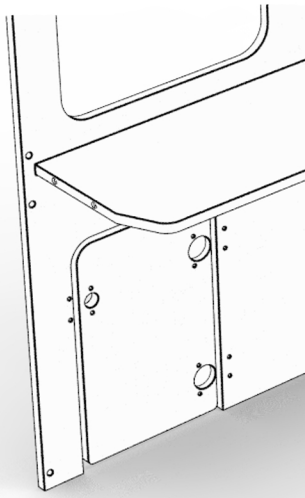

The Samet hinges are fitted using the the low fitting plates to allow the door to sit flush with the unit.

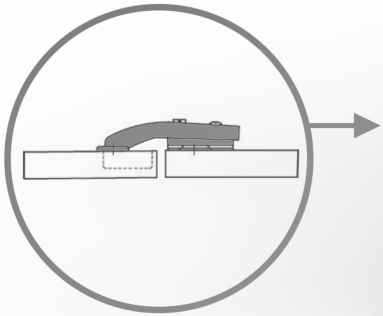

Kitline Design
Flatpack Campervan Units

DRAWS - The instructions can be found within the draw boxes.

Worktop - Top hatch

The top hatch can be fitted during or at the end of the build.

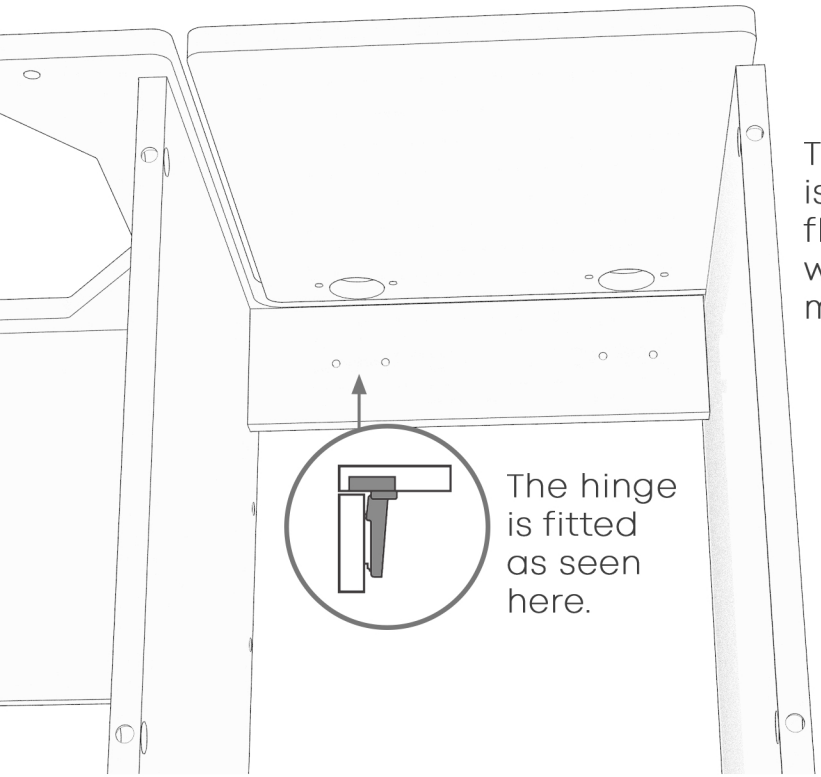

The worktop flap is fitted with the flap hinge joints with the raised mount plates.

It is then adjusted using the screws on the plates for the best fit.

Kitline Design
Flatpack Campervan Units

Apply The Edging Trim.

Every kit will be supplied with a length of silver edging trim. This knock on trim is to be placed around the edges of the panels where there is a groove cut in. On some panels it is a striaght length, on doors it's all the way round and in certain places it is on an internal cut out. However the process is the same for each.

Step 1.
Identify the parts that have a groove slotted in them. These are the panels that required edging.

Step 2.
Gently roll the edging into the grove to start then tap in with a rubber mallet or similar. The lip of the t-trim should be facing the side of the panel with no holes.

Straight Edges

If the panel is a straight piece then simply cut and trim to sit flush at both ends

Corners (Doors, Worktop)

When you approach a corner a notch will need to be cut to allow the trim to bend round to form a neat finish.

Kitline Design
Flatpack Campervan Units

Note: When cold, the edging trim becomes stiff and if you can, apply gentle heat to make it more plyable.

Tambour Doors

The tambour coner rails are fitted in the red locations. Both on the bottom of the unit and the top.

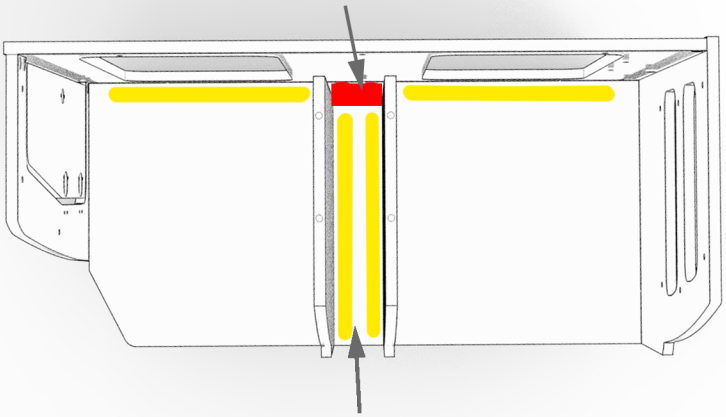

The tambour tracks are fitted in the yellow locations. Both on the bottom and the top of the unit.

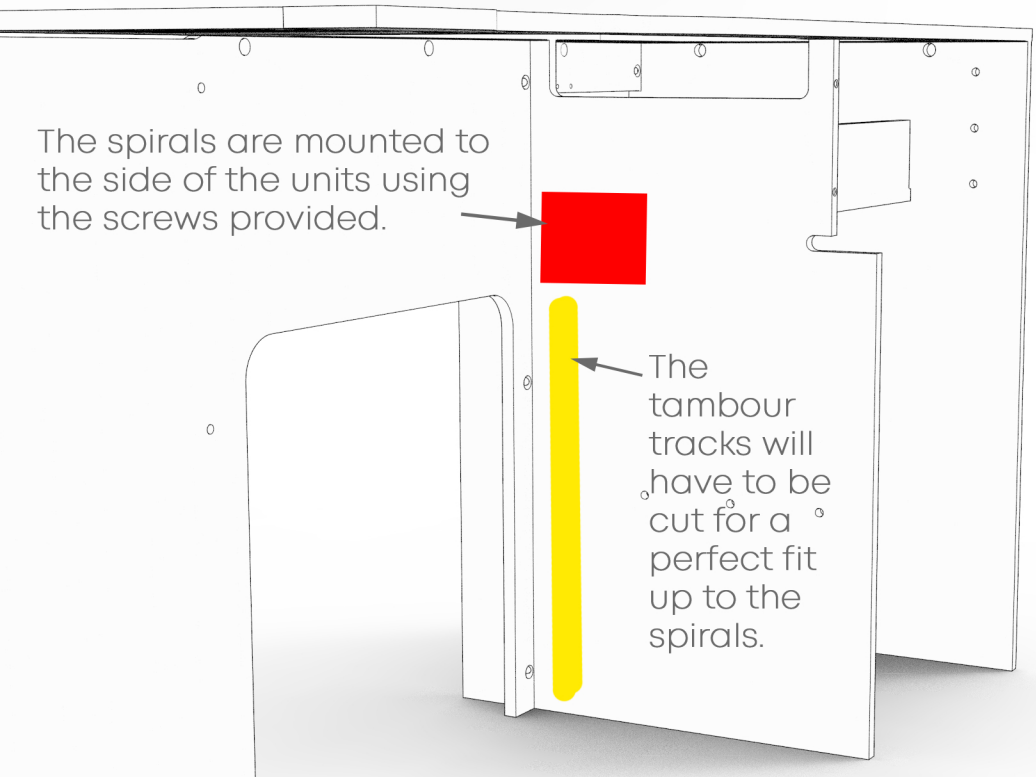

Fitting To the Van

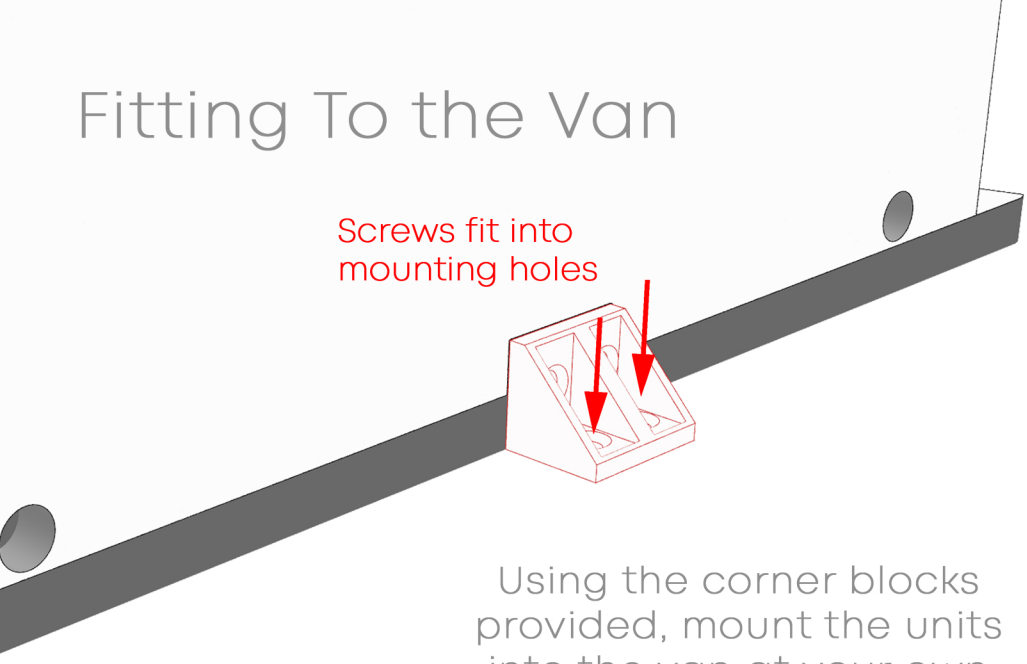

Using the corner blocks provided, mount the units into the van at your own discretion using specific screws made for metal.

To achieve the strongest fixing, mount to the interior metal struts of the van.

CAUTION:

TAKE GREAT CARE NOT TO DRILL STRAIGHT THROUGH TO THE EXTERIOR PANELS OF THE VAN.

Front Unit

1.

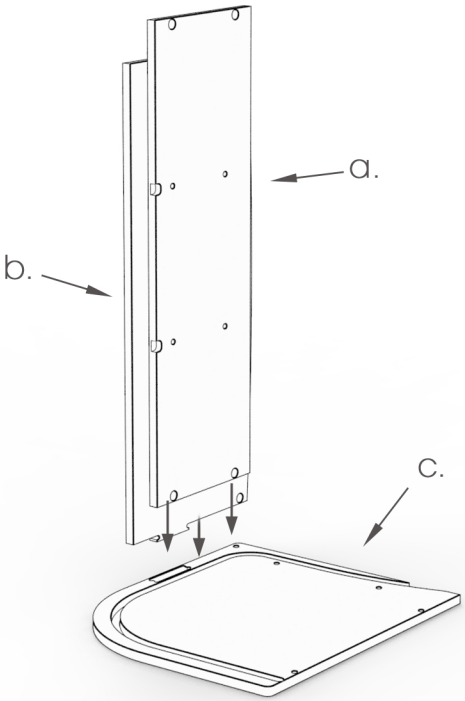

2.

d.

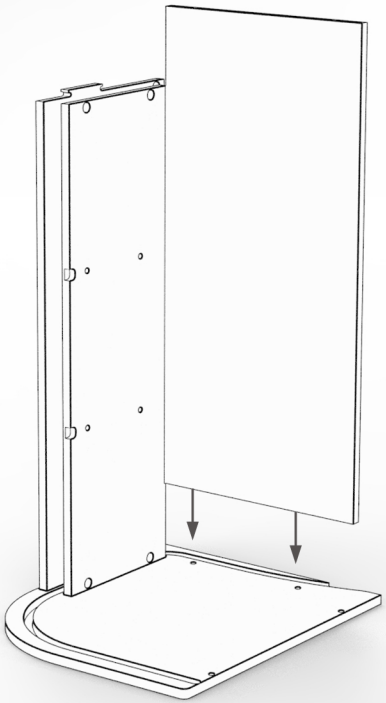

3.

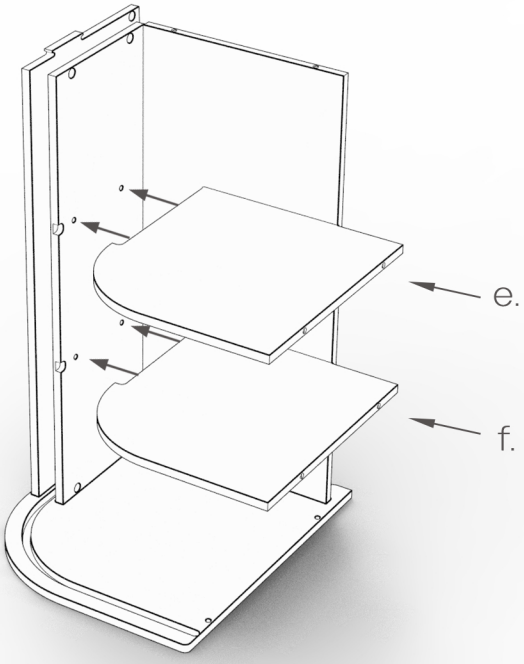

4.

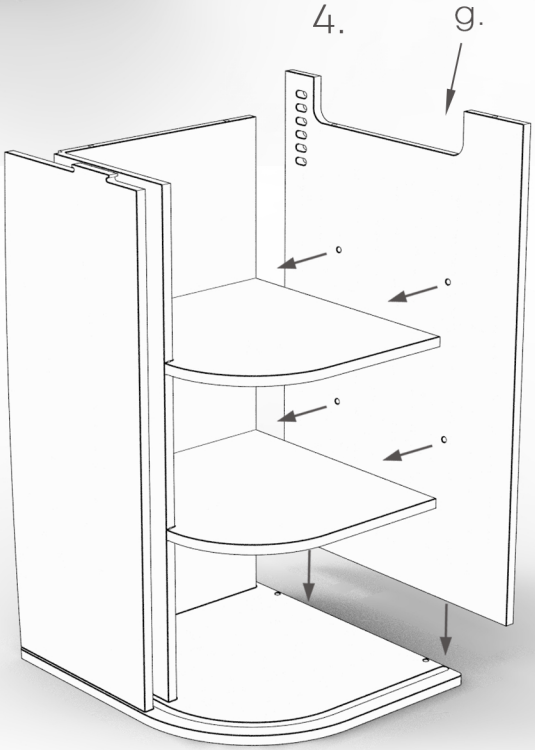

5.

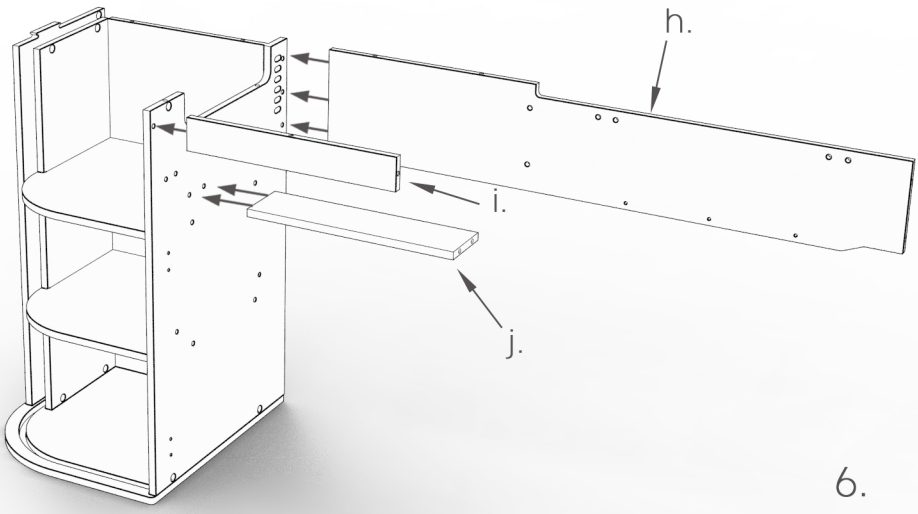

6.

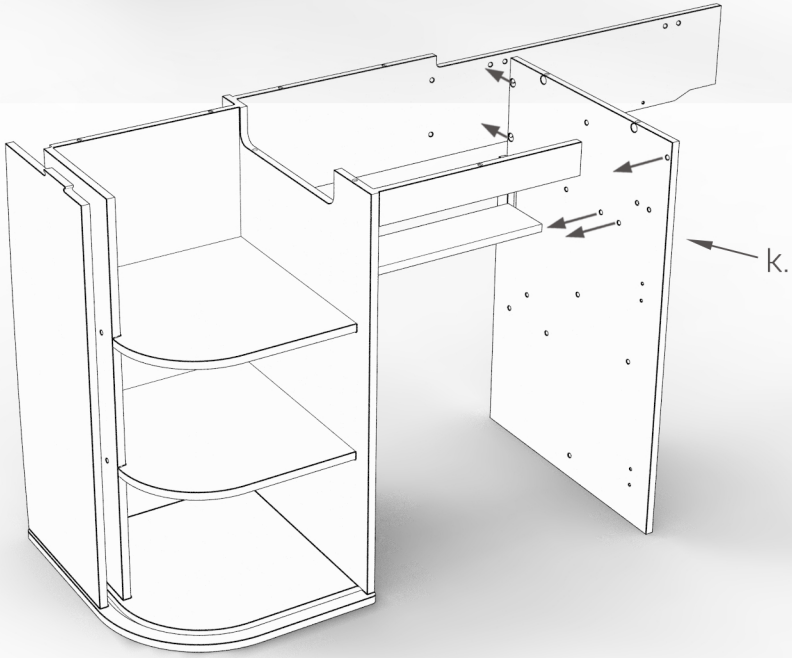

7.

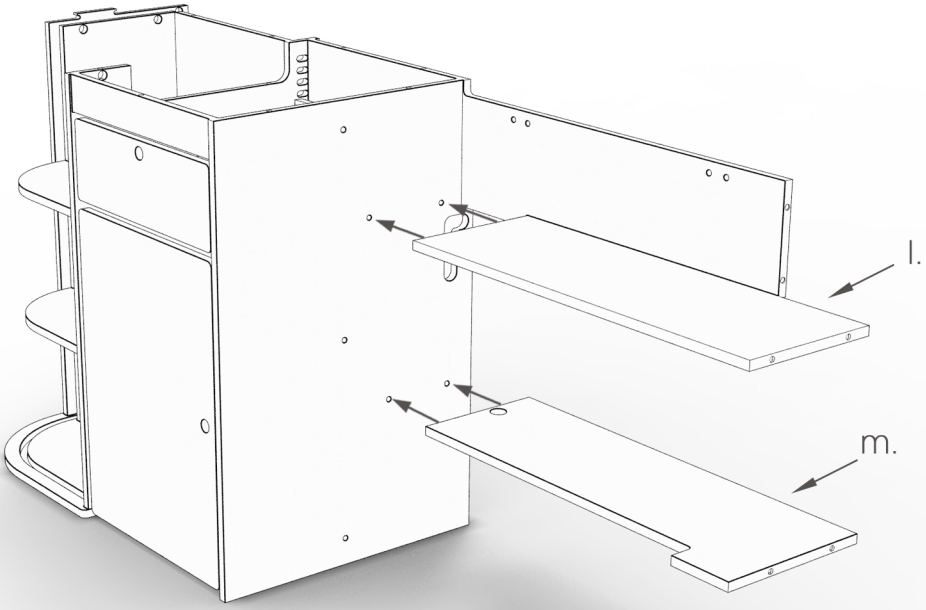

8.

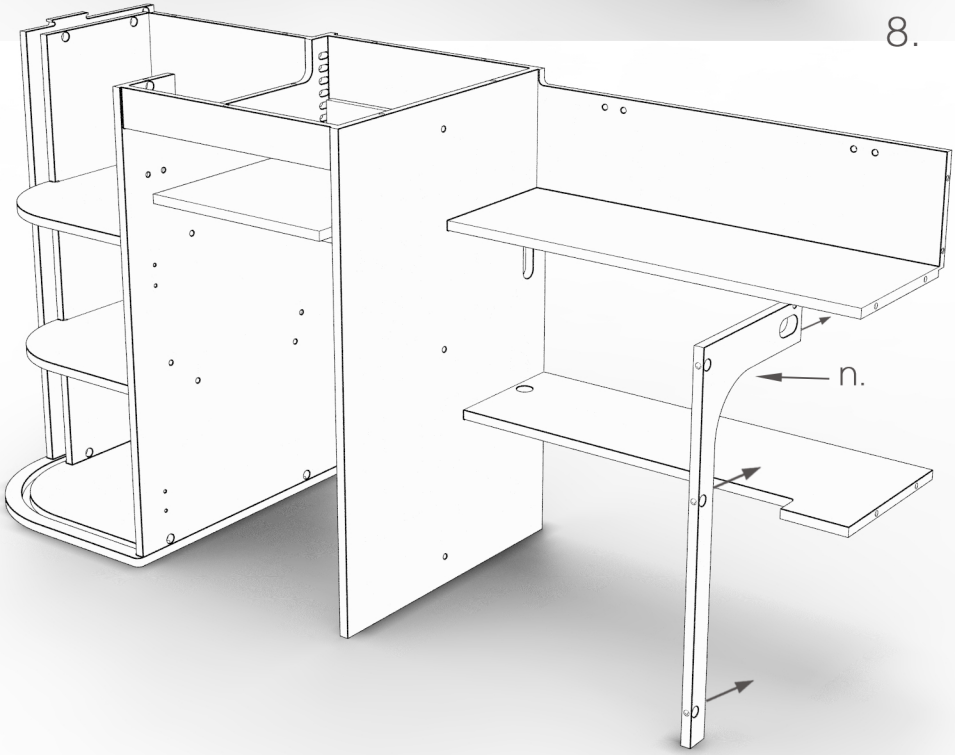

9.

o.

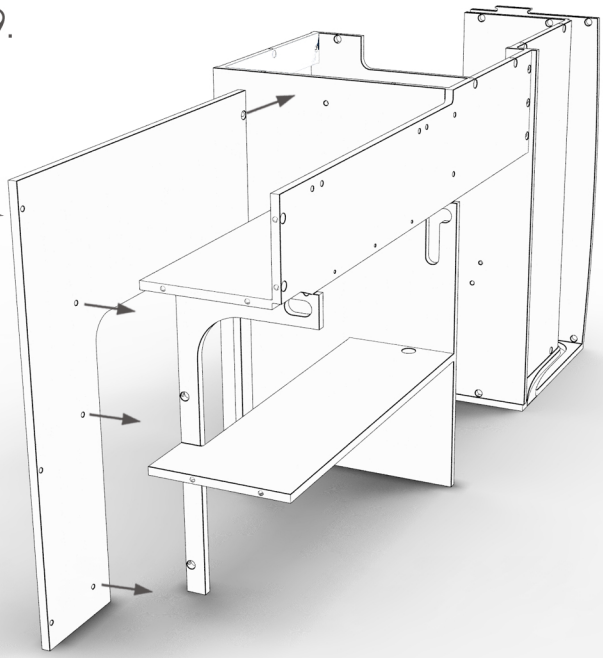

p.

10.

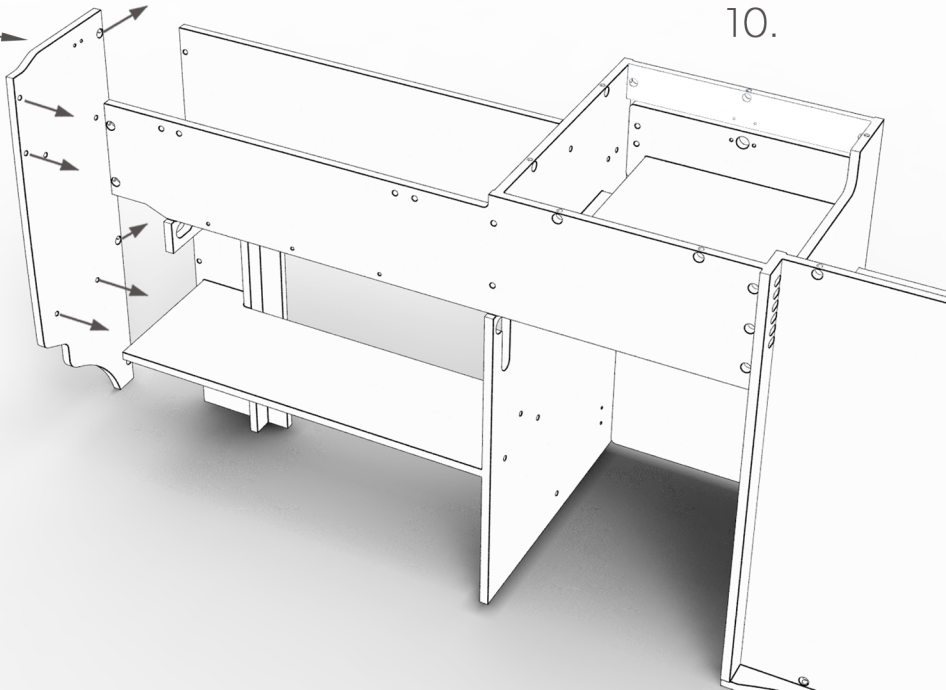

11.

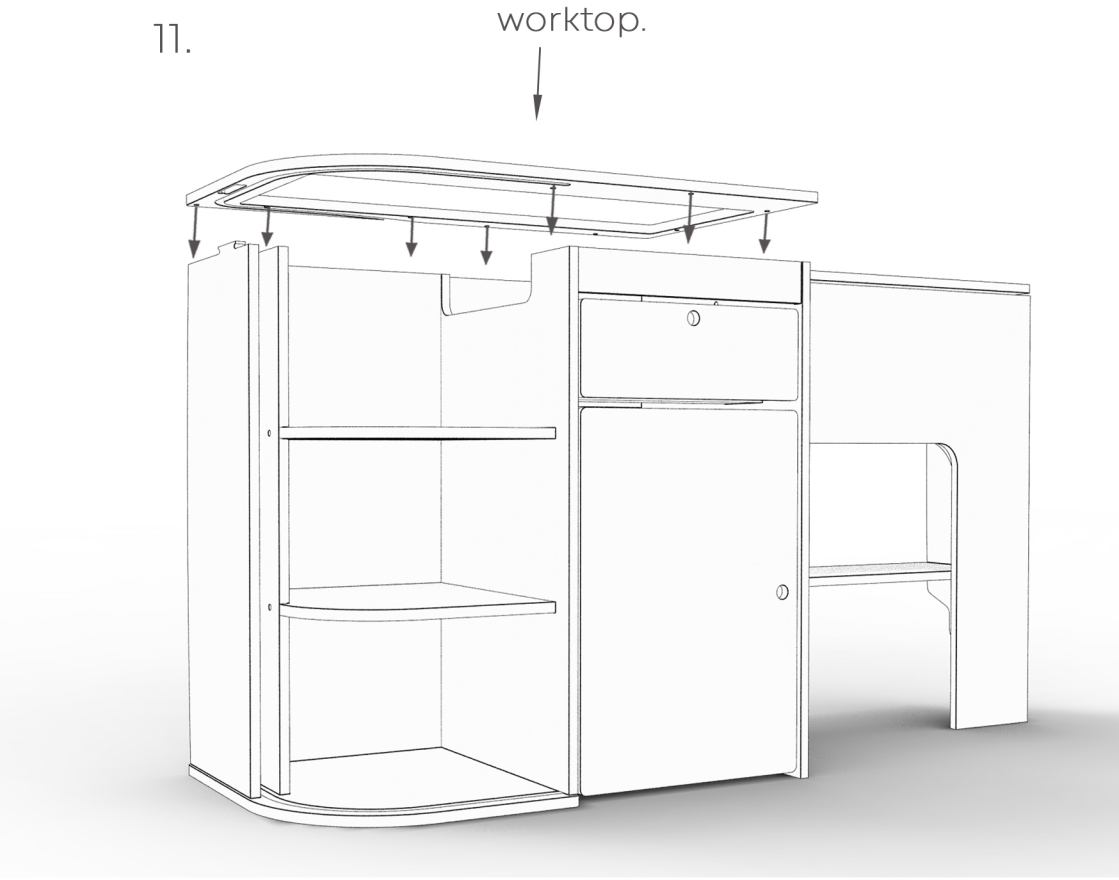

Rear Wardrobe Unit

1.

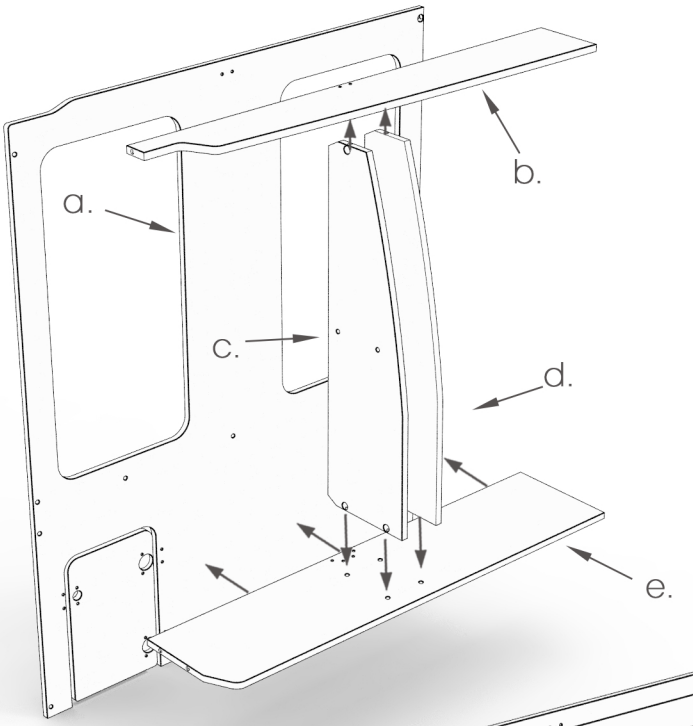

2.

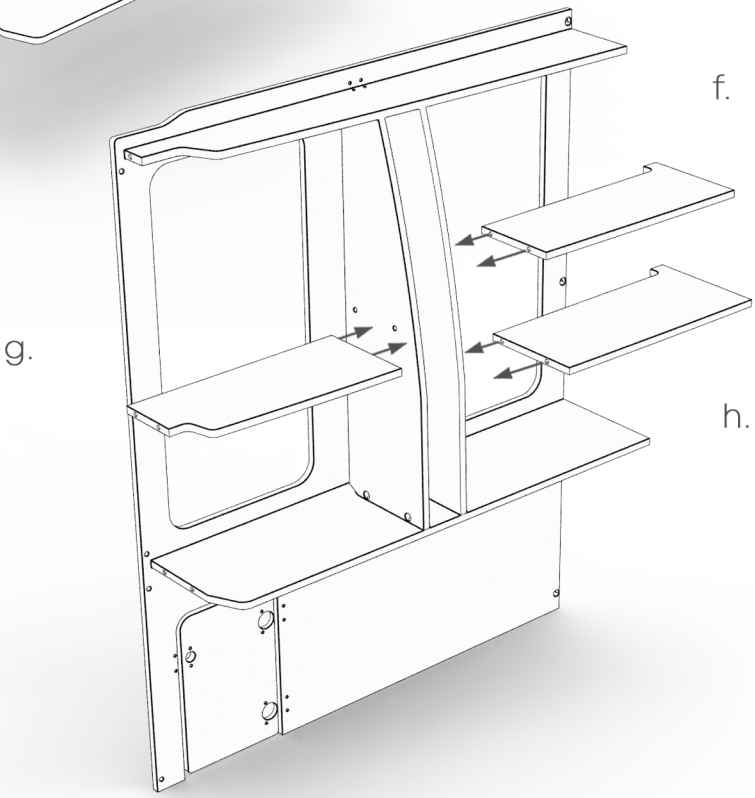

3.

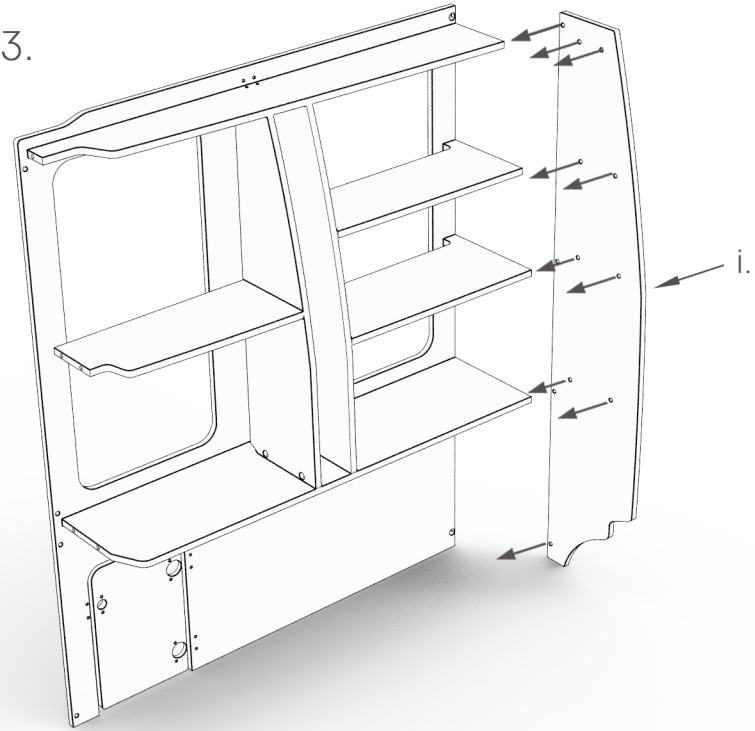
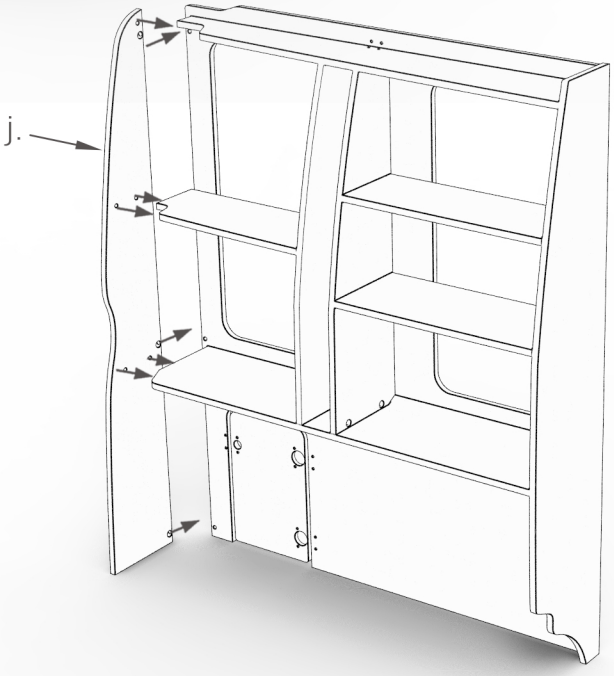
4.